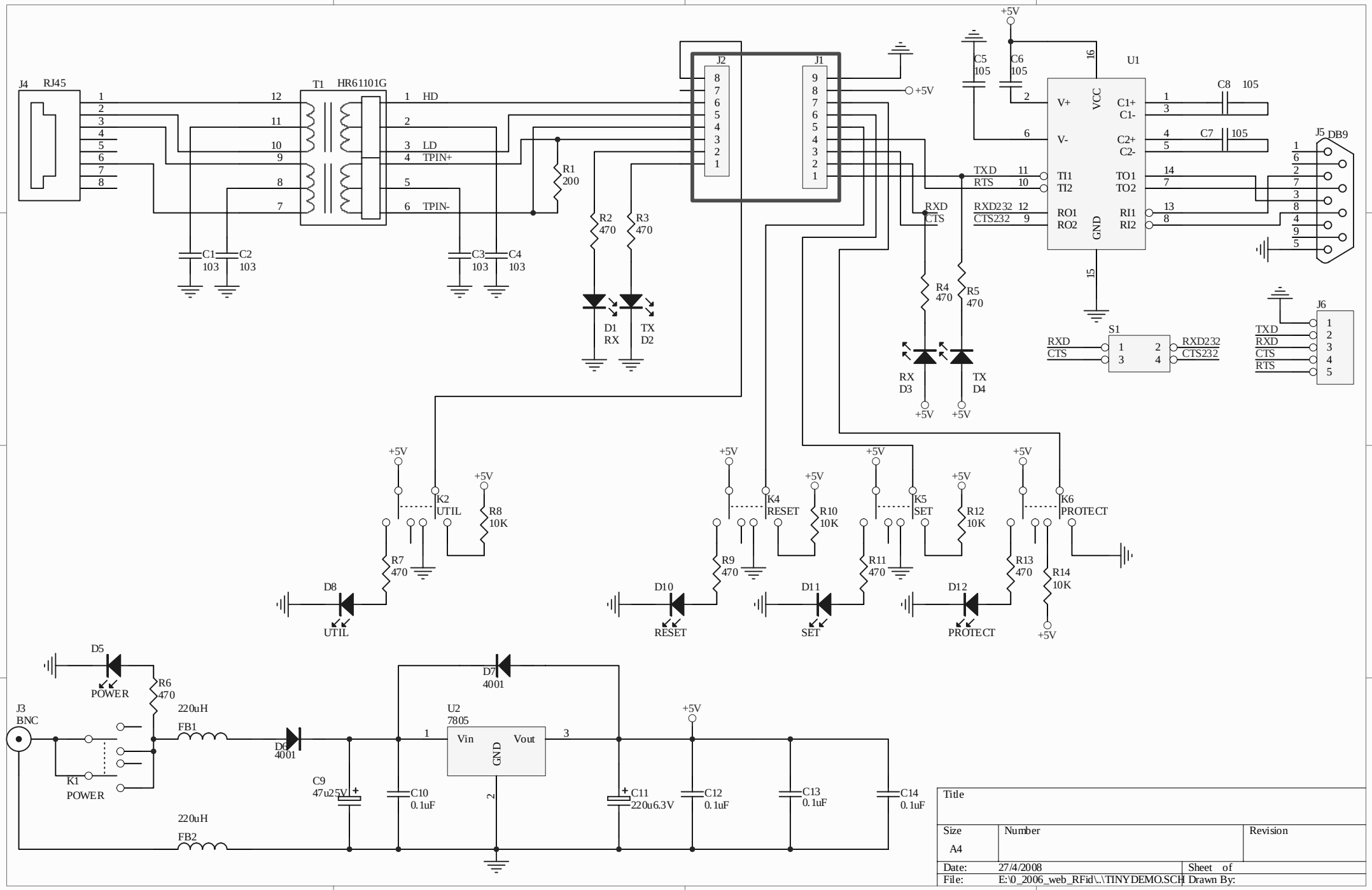
J4 RJ45
T1 HR61101G
HD
LD
TPIN+
TPIN-
J2
J1
R1 200
R2 470
R3 470
C1 103
C2 103
C3 103
C4 103
D1 RX
TX D2
+5V
C5 105
C6 105
U1
VCC
V+
V-
C1+
C1-
C2+
C2-
TI1
TI2
TO1
TO2
RO1
RO2
RI1
RI2
GND
TXD
RTS
RXD
CTS
RXD232
CTS232
C8 105
C7 105
J5 DB9
R4 470
R5 470
RX D3
TX D4
S1
J6
K2 UTIL
R8 10K
R7 470
D8
UTIL
K4 RESET
R10 10K
R9 470
D10
RESET
K5 SET
R12 10K
R11 470
D11
SET
K6 PROTECT
R13 470
R14 10K
D12
PROTECT
D5
POWER
R6 470
J3 BNC
K1 POWER
220uH
FB1
FB2
D6 4001
D7 4001
U2 7805
Vin
Vout
C9 47u25V
C10 0.1uF
C11 220u6.3V
C12 0.1uF
C13 0.1uF
C14 0.1uF
Title
Size
A4
Number
Revision
Date: 27/4/2008
Sheet of
File: E:\0_2006_web_RFid\..\TINYDEMO.SCH
Drawn By: